1

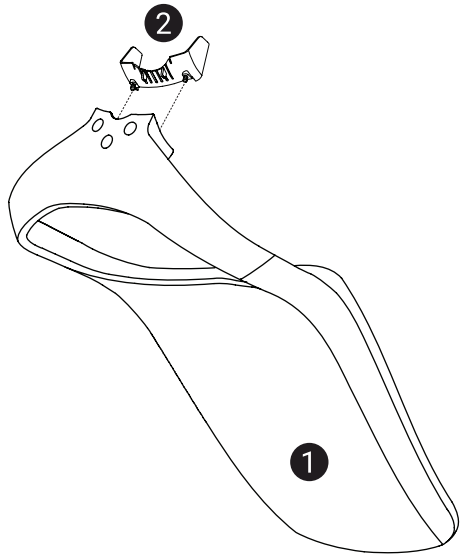

2

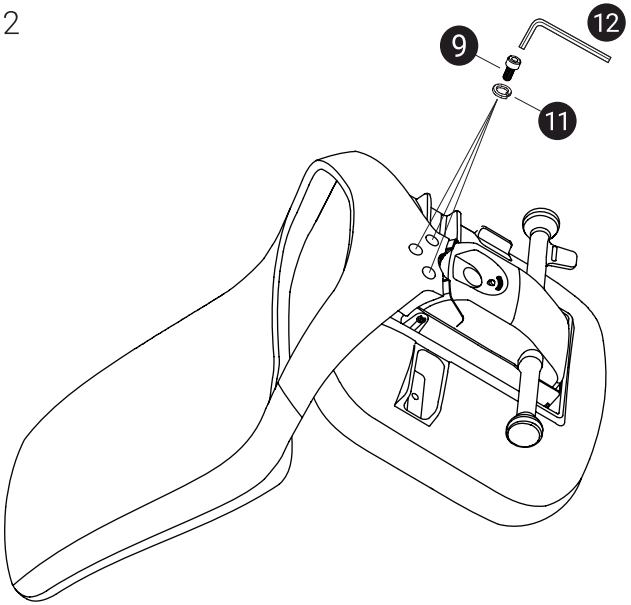

van CAS

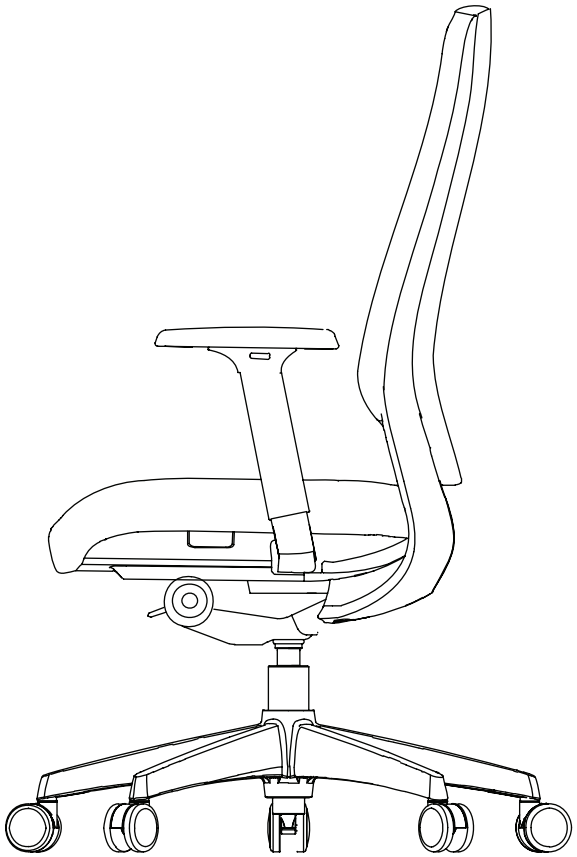

3

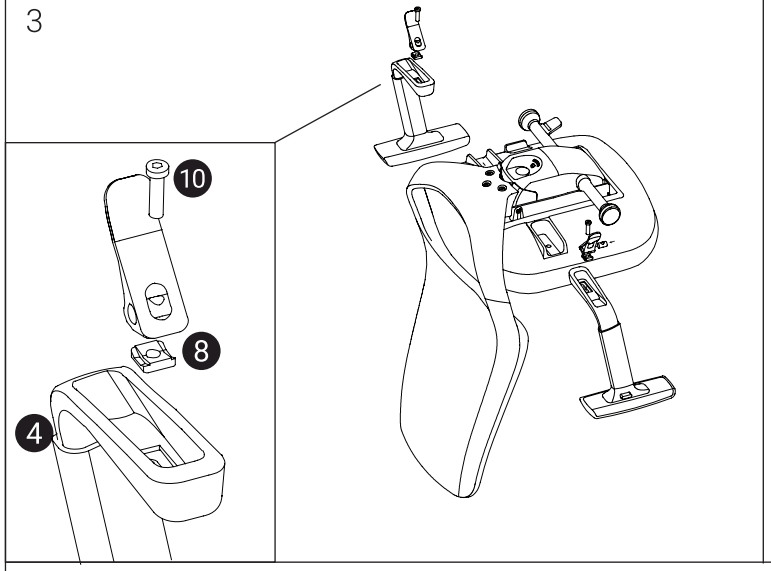

4

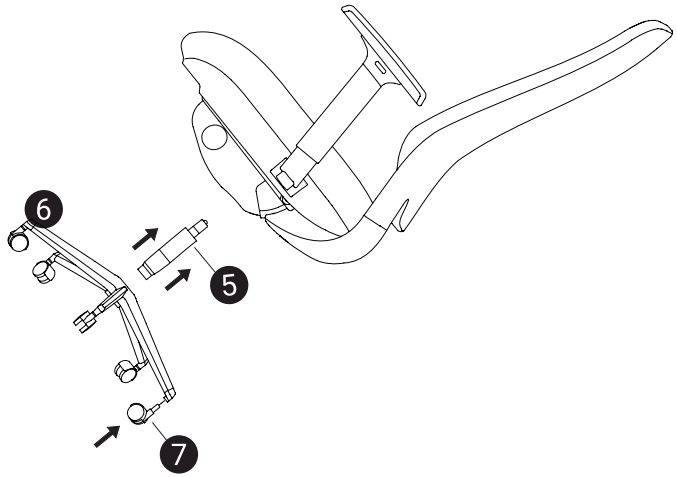

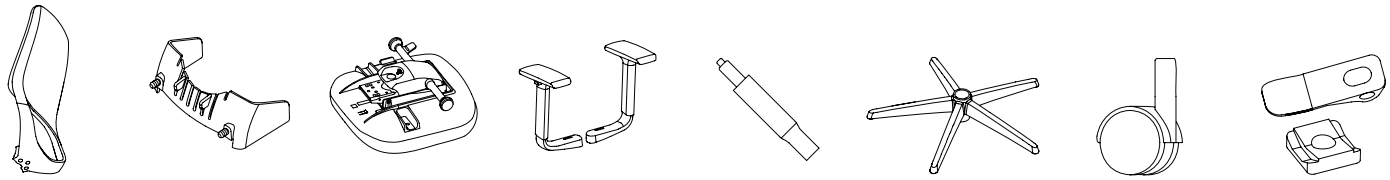

1 2 3 4 5 6 7 8

M8x35 M8x38 Ring M4

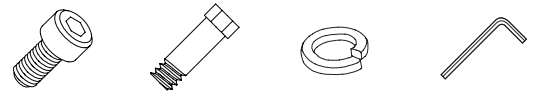

9 10 11 12

VACA17/18